GALLONS	51	49	N/A	N/A
LITERS	194	184	N/A	N/A
	TOTAL CAPACITY	USEABLE CAPACITY	TOTAL CAPACITY	USEABLE CAPACITY
	DIESEL FUEL		BIO-DIESEL/ HYDRAULIC/WATER	

REVISIONS				
ZONE	REV.	DESCRIPTION	DATE	APPROVED
	A	INITIAL RELEASE	09/08/2023	AGG

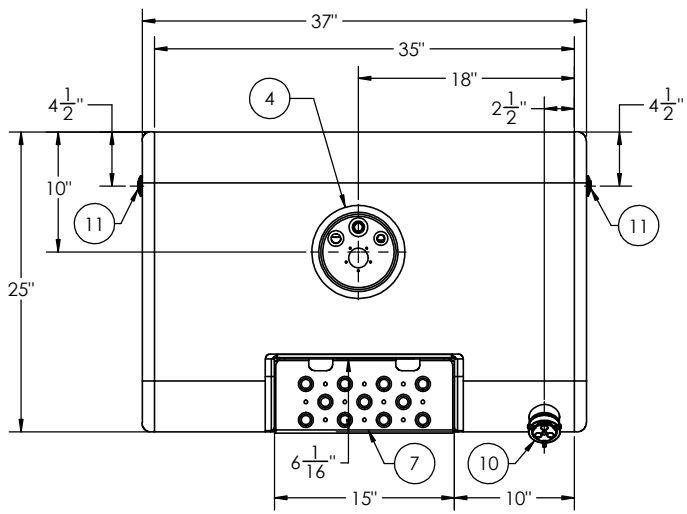

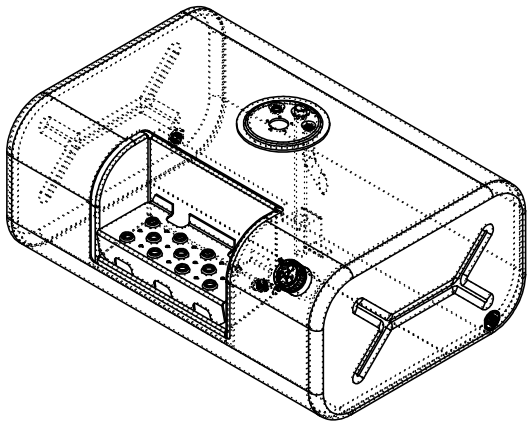

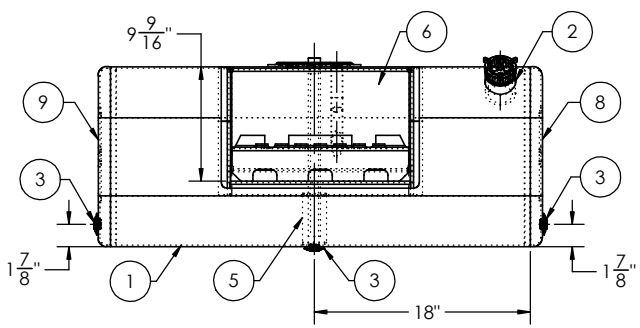

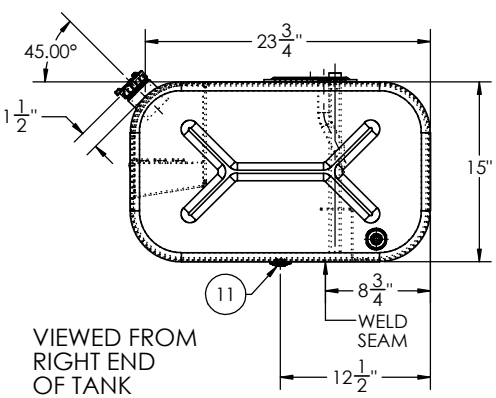

ITEM NO.	PART NUMBER	DESCRIPTION	QTY.
1	BRL-AT-IN-2001	1/8" TANK BARREL	1
2	FLN-0481012230	3" LONG - 2" NPSM - 11.5 TPI MILGRADE ALUMINUM FILL NECK	1
3	FLG-050220	1/2" NPTF MILGRADE ALUMINUM FLANGE	3
4	ADP-52222240	15" MILGRADE ALUMINUM DITCH SIDE INTERNATIONAL ADAPTER PLATE	1
5	STR-001 (FLAT 1.125)	SMALL TUBE STABILIZER (1.125)	1
6	PKT-3	15" WIDE X 9-5/8" TALL MILGRADE ALUMINUM POCKET	1
7	SEP-1	14-3/4" WIDE X TALL MILGRADE ALUMINUM INSERT STEP	1
8	ECP-1525-RIGHT 4.5	15" X 25" MILGRADE ALUMINUM RECTANGULAR END CAP WITH 1/2" FLANGE 4-1/2" FROM RIGHT	1
9	ECP-1525-LEFT 4.5	15" X 25" MILGRADE ALUMINUM RECTANGULAR END CAP WITH 1/2" FLANGE 4-1/2" FROM LEFT	1
10	FCP-1330 (600133)	2" NON-VENTED, NON-LOCK CAP	1
11	94135	1/2" SOCKET PIPE PLUG 3/4" TAPER NPTF ZINC	3

INTERNATIONAL PART NUMBER: 1661790C93

TITLE: 15" X 25" X 35" TANK

SIZE	REV	QC	INITIALS
C		PSI	
		DIMS	
		PARTS	
		TAG	
		PKG	

PROPRIETARY AND CONFIDENTIAL
THE INFORMATION CONTAINED IN THIS DRAWING IS THE SOLE PROPERTY OF ALUMITANK. ANY REPRODUCTION IN PART OR AS A WHOLE WITHOUT THE WRITTEN PERMISSION OF ALUMITANK IS PROHIBITED.

UNLESS OTHERWISE SPECIFIED:
DIMENSIONS ARE IN INCHES
TOLERANCES:
FRACTIONAL ±
ANGULAR: MACH ± BEND ±
TWO PLACE DECIMAL ±
THREE PLACE DECIMAL ±
INTERPRET GEOMETRIC TOLERANCING PER:
MATERIAL 5052 H32 ALUMINUM
FINISH SEE BOM
DO NOT SCALE DRAWING

	NAME	DATE
DRAWN		
CHECKED		
ENG APPR.		
MFG APPR.		
Q.A.		

COMMENTS:

AlumiTank® THE BULK TANK SPECIALISTS
11317 N. US HWY 14
HARVARD, IL 60033
815-943-6649
800-652-6630
FAX 855-774-6918
WWW.ALUMITANK.COM
INFO@ALUMITANK.COM

DWG. NO. AT-IN-2001-GAL REV. A

SCALE: 1:8 | WEIGHT: 47.14 | SHEET 1 OF 1