GALLONS	55	52	N/A	N/A
LITERS	209	198	N/A	N/A
	TOTAL CAPACITY	USEABLE CAPACITY	TOTAL CAPACITY	USEABLE CAPACITY
	DIESEL FUEL		BIO-DIESEL/ HYDRAULIC/WATER	

REVISIONS				
ZONE	REV.	DESCRIPTION	DATE	APPROVED
	A	INITIAL RELEASE	08/31/2021	ACH
B1	B	B1. ZONE C2: ADDED DIMENSION	11/03/2023	ANB

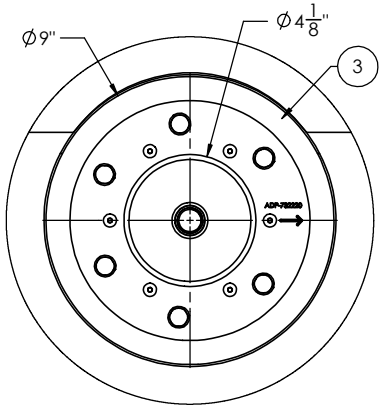

DETAIL A
SCALE 1 : 3
GASKET REMOVED
FOR CLARITY

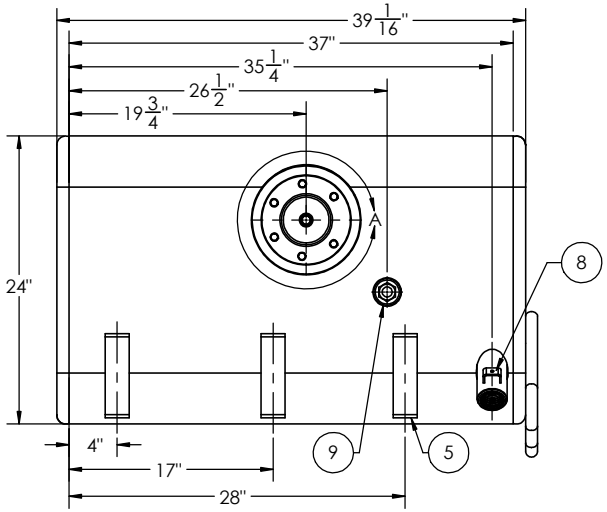

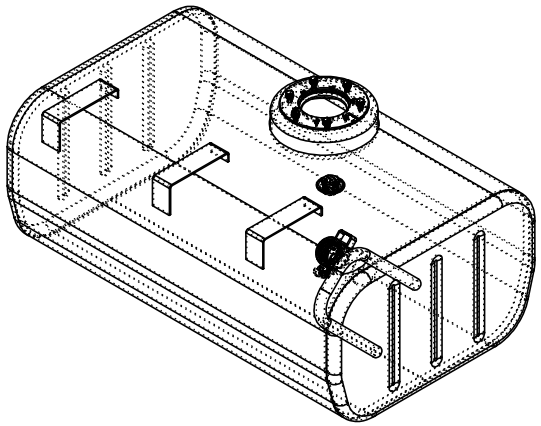

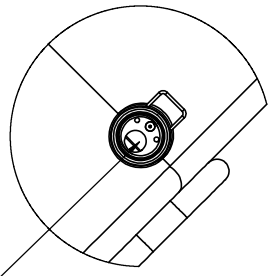

LARGE HOLE
TOWARDS
BOTTOM OF TANK

VIEW C-C
SCALE 1 : 4
GASOLINE INTERNAL
THREAD FILL NECK

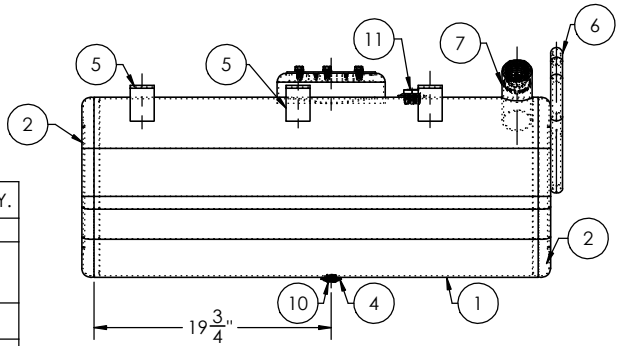

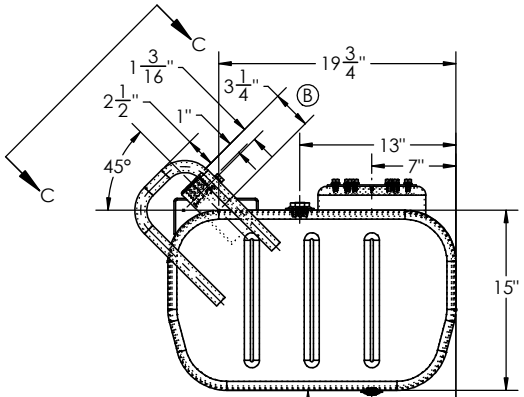

VIEWED FROM
RIGHT SIDE
OF TANK

WELD
SEAM

GASOLINE TANK

ITEM NO.	PART NUMBER	DESCRIPTION	QTY.
1	BRL-AT-GM-4014	1/8" TANK BARREL	1
2	ECP-024038412500	15" X 24" MILGRADE ALUMINUM TAPERED BOTTOM END CAP	2
3	ADP-732220	MILGRADE ALUMINUM GMC RISER DOME PLATE (NEW)	1
4	FLG-050220	1/2" NPTF MILGRADE ALUMINUM FLANGE	1
5	CLP-2	GM UPPER STEP CLIP	3
6	FILL NECK GUARD	1" TUBING GUARD	1
7	FLN-096012210	6" LONG - MILGRADE ALUMINUM GASOLINE FILL NECK	1
8	MSC-026	MILGRADE ALUINUM GASOLINE CAP TETHER BRACKET	1
9	FLG-070220	1" NPTF MILGRADE ALUMINUM FLANGE	1
10	94135	1/2" SOCKET PIPE PLUG 3/4" TAPER NPTF ZINC	1
11	MSC-032	1" NPT THERMAL RELIEF	1

TITLE:

SIZE	REV	QC	INITIALS
C		PSI	
		DIMS	
		PARTS	
		TAG	
		PKG	

PROPRIETARY AND CONFIDENTIAL
THE INFORMATION CONTAINED IN THIS DRAWING IS THE SOLE PROPERTY OF ALUMITANK. ANY REPRODUCTION IN PART OR AS A WHOLE WITHOUT THE WRITTEN PERMISSION OF ALUMITANK IS PROHIBITED.

UNLESS OTHERWISE SPECIFIED:
DIMENSIONS ARE IN INCHES
TOLERANCES:
FRACTIONAL ±
ANGULAR: MACH ± BEND ±
TWO PLACE DECIMAL ±
THREE PLACE DECIMAL ±
INTERPRET GEOMETRIC TOLERANCING PER:
MATERIAL 5052 H32 ALUMINUM
FINISH SEE BOM
DO NOT SCALE DRAWING

	NAME	DATE
DRAWN		
CHECKED		
ENG APPR.		
MFG APPR.		
Q.A.		

COMMENTS:

AlumiTank®
THE FUEL TANK SPECIALISTS
11317 N. US HWY 14
HARVARD, IL 60033
815-943-6649
800-652-6630
FAX 855-774-6918
WWW.ALUMITANK.COM
INFO@ALUMITANK.COM

DWG. NO. AT-GM-4014-GAL
REV. B
SCALE: 1:8 | WEIGHT: 46.00 | SHEET 1 OF 1