GALLONS	55	52	N/A	N/A
LITERS	209	198	N/A	N/A
	TOTAL CAPACITY	USEABLE CAPACITY	TOTAL CAPACITY	USEABLE CAPACITY
	DIESEL FUEL		BIO-DIESEL/ HYDRAULIC/WATER	

REVISIONS

ZONE	REV.	DESCRIPTION	DATE	APPROVED
	A	INITIAL RELEASE FROM LEGACY	07/12/2021	ACH

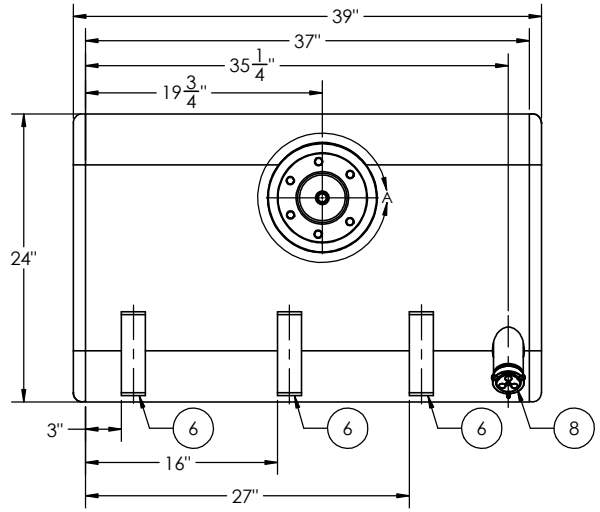

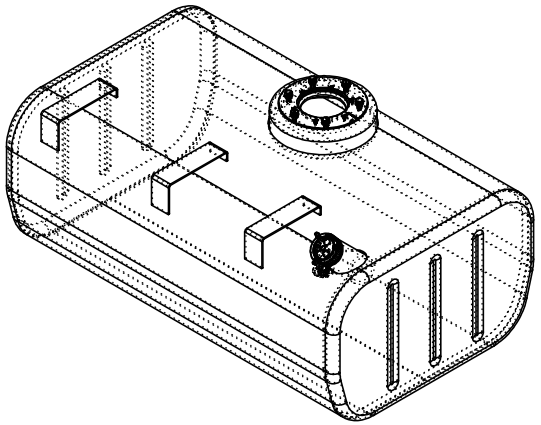

CAUTION:
VERIFY RISER PLATE HOLE SIZE AND HOSE DIRECTION RELATIVE TO ARROW

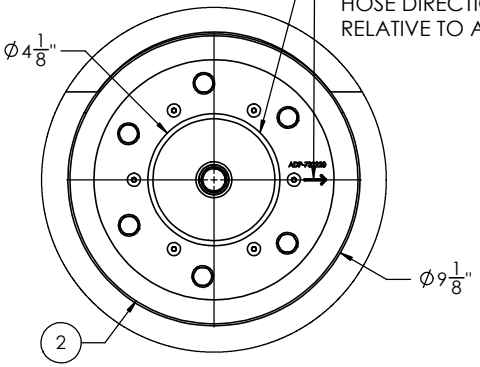

DETAIL A
SCALE 1 : 3
GASKET REMOVED FOR CLARITY

TRUCK FRONT
DRIVER SIDE

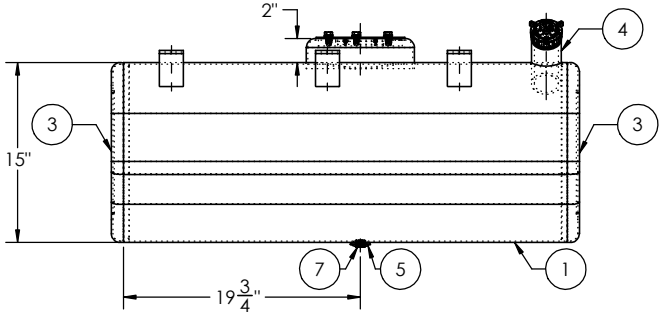

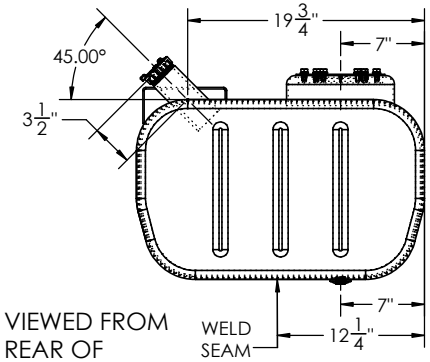

VIEWED FROM REAR OF DRIVER SIDE

ITEM NO.	PART NUMBER	DESCRIPTION	QTY.
1	BRL-AT-GM-4001	1/8" TANK BARREL	1
2	ADP-732220	MILGRADE ALUMINUM GMC RISER DOME PLATE (NEW)	1
3	ECP-024038412500	15" X 24" MILGRADE ALUMINUM TAPERED BOTTOM END CAP	2
4	FLN-0961012230	6" LONG - 2" NPSM - 11.5 TPI MILGRADE ALUMINUM FILL NECK	1
5	FLG-050220	1/2" NPTF MILGRADE ALUMINUM FLANGE	1
6	CLP-2	GM UPPER STEP CLIP	3
7	94135	1/2" SOCKET PIPE PLUG 3/4" TAPER NPTF ZINC	1
8	FCP-1330 (600133)	2" NON-VENTED, NON-LOCK CAP	1

TITLE:

SIZE	REV	QC	INITIALS
C		PSI	
		DIMS	
		PARTS	
		TAG	
		PKG	

PROPRIETARY AND CONFIDENTIAL
THE INFORMATION CONTAINED IN THIS DRAWING IS THE SOLE PROPERTY OF ALUMITANK. ANY REPRODUCTION IN PART OR AS A WHOLE WITHOUT THE WRITTEN PERMISSION OF ALUMITANK IS PROHIBITED.

UNLESS OTHERWISE SPECIFIED:
DIMENSIONS ARE IN INCHES
TOLERANCES:
FRACTIONAL ±
ANGULAR: MACH ± BEND ±
TWO PLACE DECIMAL ±
THREE PLACE DECIMAL ±
INTERPRET GEOMETRIC TOLERANCING PER:
MATERIAL 5052 H32 ALUMINUM
FINISH SEE BOM
DO NOT SCALE DRAWING

	NAME	DATE
DRAWN	BREATHERSTONE	
CHECKED		
ENG APPR.		
MFG APPR.		
Q.A.		

COMMENTS:

AlumiTank®
THE FUEL TANK SPECIALISTS
11317 N. US HWY 14
HARVARD, IL 60033
815-943-6649
800-652-6630
FAX 855-774-6918
WWW.ALUMITANK.COM
INFO@ALUMITANK.COM

DWG. NO. AT-GM-4001-GAL REV. B
SCALE: 1:8 | WEIGHT: 45.42 | SHEET 1 OF 1