GALLONS	100	95	N/A	N/A
LITERS	379	360	N/A	N/A
	TOTAL CAPACITY	USEABLE CAPACITY	TOTAL CAPACITY	USEABLE CAPACITY
	DIESEL FUEL		BIO-DIESEL/ HYDRAULIC/WATER	

REVISIONS				
ZONE	REV.	DESCRIPTION	DATE	APPROVED
	A	INITIAL RELEASE FROM LEGACY	07/27/2021	NF

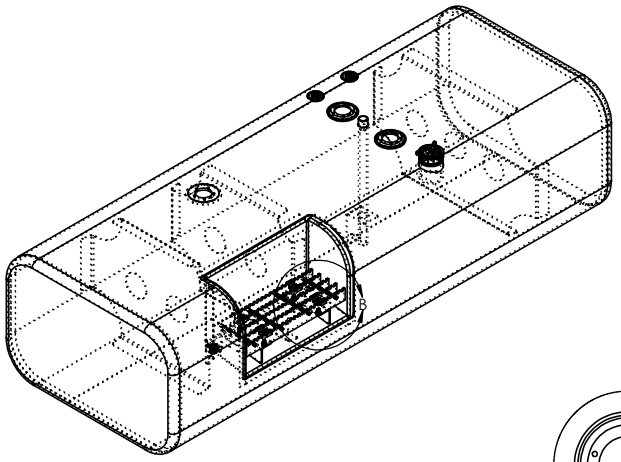

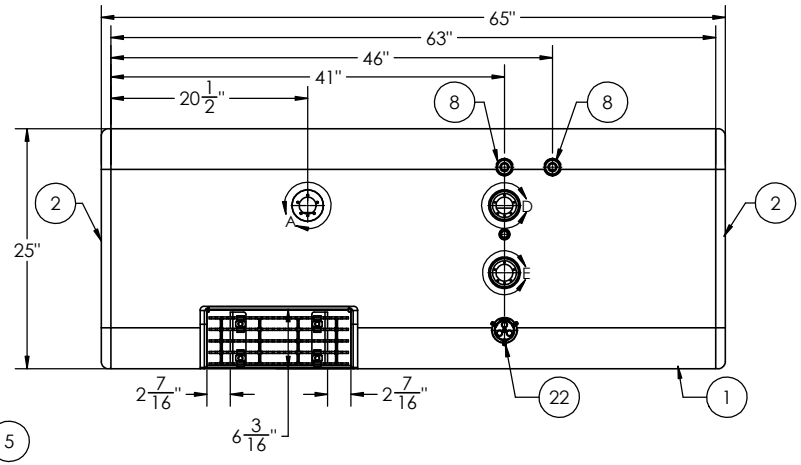

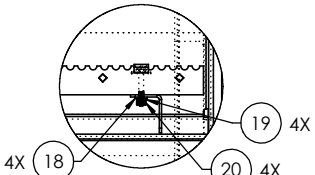

DETAIL C
SCALE 1 : 5

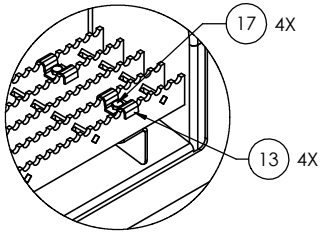

DETAIL B
SCALE 1 : 4

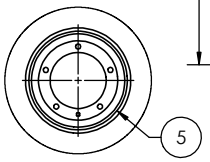

DETAIL E
SCALE 1 : 3

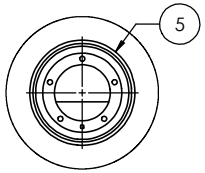

DETAIL D
SCALE 1 : 3

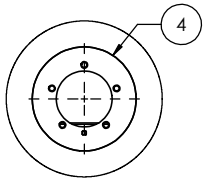

DETAIL A
SCALE 1 : 3

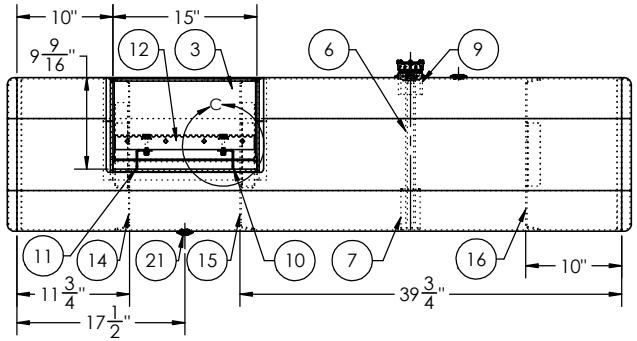

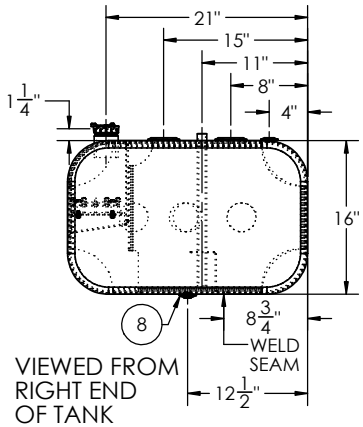

VIEWED FROM RIGHT END OF TANK

ITEM NO.	PART NUMBER	DESCRIPTION	QTY.
1	BRL-AT-IN-2006	1/8" TANK BARREL	1
2	ECP-025640012600	16" X 25" MILGRADE ALUMINUM RECTANGULAR END CAP	2
3	PKT-3	15" WIDE X 9-5/8" TALL MILGRADE ALUMINUM POCKET	1
4	PLT-11244	FLUSH SENDER BASE ROTATED -90°	1
5	BSE-00182230	FLAT MILGRADE ALUMINUM SENDER BASE	2
6	TBS-503200	1/2" NPTF STRAIGHT ALUMINUM TUBE	1
7	STR-001 (FLAT 1.125)	SMALL TUBE STABILIZER (1.125)	1
8	FLG-050220	1/2" NPTF MILGRADE ALUMINUM FLANGE	3
9	FLN-0481012230	3" LONG - 2" NPSM - 11.5 TPI MILGRADE ALUMINUM FILL NECK	1
10	CLP-4	STEP CLIP (RIGHT HAND SIDE)	1
11	CLP-3	STEP CLIP (LEFT HAND SIDE)	1
12	SEP-10	14-1/2" WIDE MILGRADE ALUMINUM GRIP STRUT STEP	1
13	0958070	STAINLESS STEEL CURVED SADDLE CLIP FOR 1-3/16" GRATING	4
14	BAF-11244-1-LEFT	1/8" LEFT SPLASH BAFFLE	1
15	BAF-11244-1-RIGHT	1/8" RIGHT SPLASH BAFFLE	1
16	BAF-11244-2	SPLASH BAFFLE	1
17	92198A548 (70010)	1/4"-20 x 1-3/4" ASTM F593 18-8 STAINLESS STEEL HEX CAP SCREW	4
18	71013	1/4, FLAT WASHER, SMALL OD, 18-8 STAINLESS STEEL	4
19	71063	1/4, LOCK WASHER, REGULAR SPLIT, 18-8 STAINLESS STEEL	4
20	91845A029 (70710)	1/4"-20 18-8 STAINLESS STEEL FINISHED HEX NUT	4
21	94135	1/2" SOCKET PIPE PLUG 3/4" TAPER NPTF ZINC	1
22	FCP-1330 (600133)	2" NON-VENTED, NON-LOCK CAP	1

TITLE:

SIZE	REV	QC	INITIALS
C		PSI	
		DIMS	
		PARTS	
		TAG	
		PKG	

PROPRIETARY AND CONFIDENTIAL
THE INFORMATION CONTAINED IN THIS DRAWING IS THE SOLE PROPERTY OF ALUMITANK. ANY REPRODUCTION IN PART OR AS A WHOLE WITHOUT THE WRITTEN PERMISSION OF ALUMITANK IS PROHIBITED.

UNLESS OTHERWISE SPECIFIED:
DIMENSIONS ARE IN INCHES
TOLERANCES:
FRACTIONAL ±
ANGULAR: MACH ± BEND ±
TWO PLACE DECIMAL ±
THREE PLACE DECIMAL ±
INTERPRET GEOMETRIC TOLERANCING PER:
MATERIAL 5052 H32 ALUMINUM
FINISH SEE BOM
DO NOT SCALE DRAWING

	NAME	DATE
DRAWN		
CHECKED		
ENG APPR.		
MFG APPR.		
Q.A.		

COMMENTS:

AlumiTank®
THE BULK TANK SPECIALISTS
11317 N. US HWY 14
HARVARD, IL 60033
815-943-6649
800-652-6630
FAX 855-774-6918
WWW.ALUMITANK.COM
INFO@ALUMITANK.COM

DWG. NO. AT-IN-2006 REV. A

SCALE: 1:10 | WEIGHT: 85.45 | SHEET 1 OF 1