GALLONS	105	100	N/A	N/A
LITERS	397	377	N/A	N/A
	TOTAL CAPACITY	USEABLE CAPACITY	TOTAL CAPACITY	USEABLE CAPACITY
	DIESEL FUEL		BIO-DIESEL/ HYDRAULIC/WATER	

REVISIONS				
ZONE	REV.	DESCRIPTION	DATE	APPROVED
	A	INITIAL RELEASE	09/14/2021	ACH

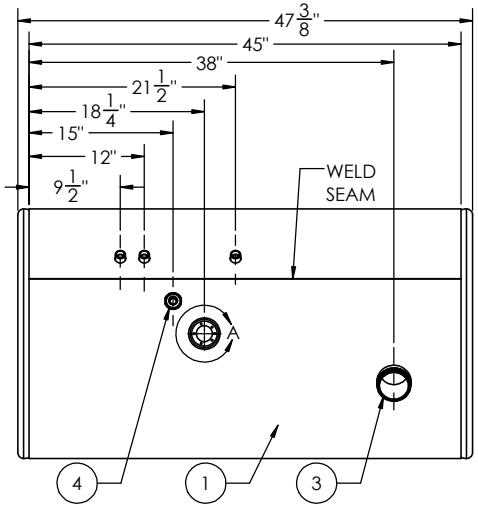

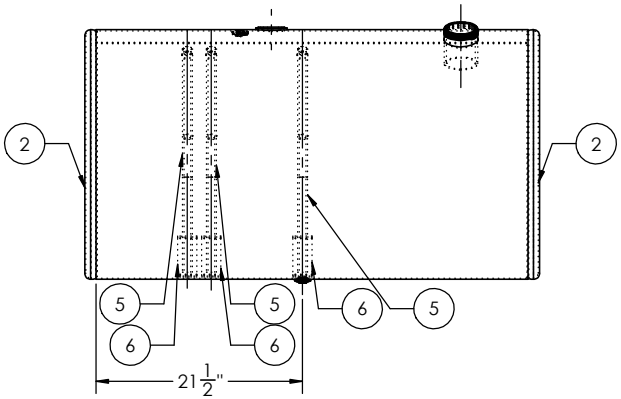

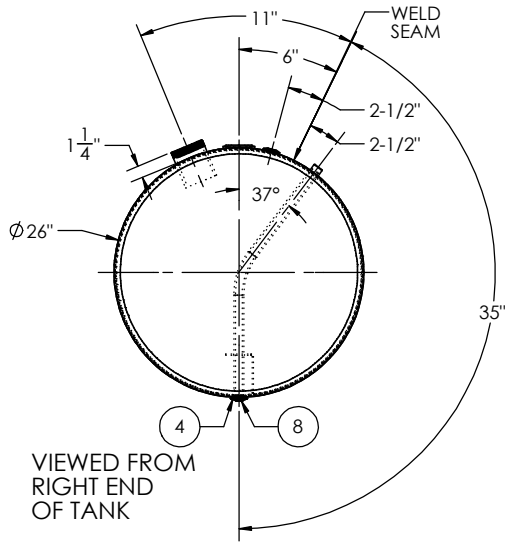

VIEWED FROM RIGHT END OF TANK

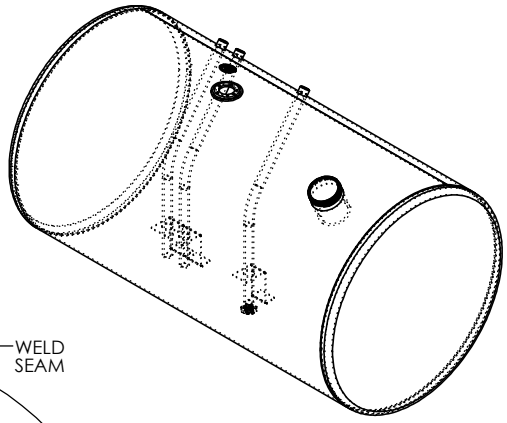

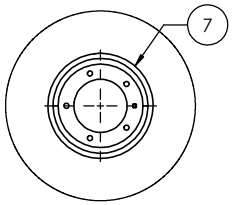

DETAIL A
SCALE 1 : 3

ITEM NO.	PART NUMBER	DESCRIPTION	QTY.
1	BRL-AT-IN-1010	1/8" TANK BARREL	1
2	ECP-4160012100	26" MILGRADE ALUMINUM END CAP	2
3	FLN-0641212210	4" LONG - 3" NPSM - 8 TPI MILGRADE ALUMINUM FILL NECK	1
4	FLG-050220	1/2" NPTF MILGRADE ALUMINUM FLANGE	2
5	TBS-501200	1/2" NPTF BENT ALUMINUM TUBE	3
6	STR-001 (DIA 26.00 TUBE 1.125)	SMALL TUBE STABILIZER (1.125)	3
7	BSE-00182220	CURVED MILGRADE ALUMINUM SENDER BASE	1
8	94135	1/2" SOCKET PIPE PLUG 3/4" TAPER NPTF ZINC	1

INTERNATIONAL PART NUMBER: 2589222C91

TITLE: 26" x 45" TANK

SIZE: C | REV | QC | INITIALS | PSI | DIMS | PARTS | TAG | PKG

PROPRIETARY AND CONFIDENTIAL
THE INFORMATION CONTAINED IN THIS DRAWING IS THE SOLE PROPERTY OF ALUMITANK. ANY REPRODUCTION IN PART OR AS A WHOLE WITHOUT THE WRITTEN PERMISSION OF ALUMITANK IS PROHIBITED.

UNLESS OTHERWISE SPECIFIED:
DIMENSIONS ARE IN INCHES
TOLERANCES:
FRACTIONAL ±
ANGULAR: MACH ± BEND ±
TWO PLACE DECIMAL ±
THREE PLACE DECIMAL ±
INTERPRET GEOMETRIC TOLERANCING PER:
MATERIAL: 5052 H32 ALUMINUM
FINISH: SEE BOM
DO NOT SCALE DRAWING

	NAME	DATE
DRAWN		
CHECKED		
ENG APPR.		
MFG APPR.		
Q.A.		

COMMENTS:

AlumiTank® THE FUEL TANK SPECIALISTS
11317 N. US HWY 14
HARVARD, IL 60033
815-943-6649
800-652-6630
FAX 855-774-6918
WWW.ALUMITANK.COM
INFO@ALUMITANK.COM

DWG. NO. AT-IN-1010-GAL | REV. A

SCALE: 1:10 | WEIGHT: 64.04 | SHEET 1 OF 1