GALLONS	52	50	N/A	N/A
LITERS	199	189	N/A	N/A
	TOTAL CAPACITY	USEABLE CAPACITY	TOTAL CAPACITY	USEABLE CAPACITY
	DIESEL FUEL		BIO-DIESEL/ HYDRAULIC/WATER	

REVISIONS				
ZONE	REV.	DESCRIPTION	DATE	APPROVED
	A	INITIAL RELEASE	10/13/2021	ACH

CAUTION:
VERIFY RISER PLATE HOLE SIZE AND HOSE DIRECTION RELATIVE TO ARROW

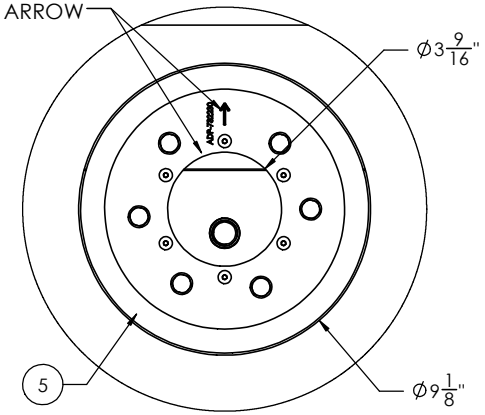

DETAIL A
SCALE 1 : 3
GASKET REMOVED
FOR CLARITY

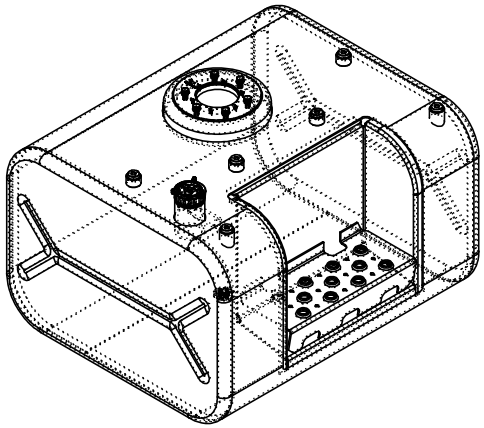

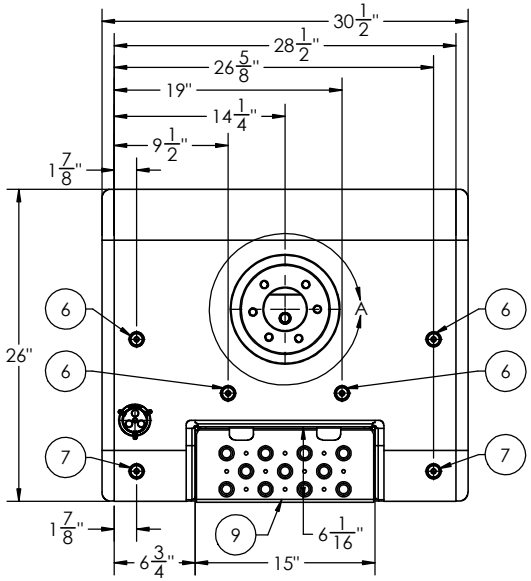

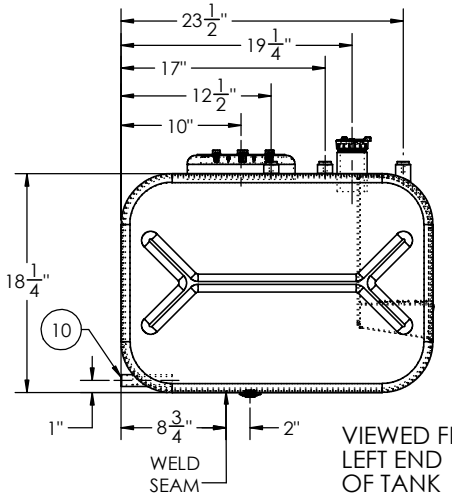

VIEWED FROM LEFT END OF TANK

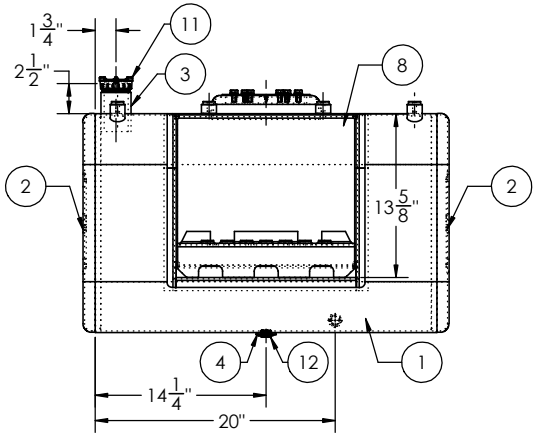

ITEM NO.	PART NUMBER	DESCRIPTION	QTY.
1	BRL-AT-GM-2002	1/8" TANK BARREL	1
2	ECP-029241612600	18-1/4" X 26" MILGRADE ALUMINUM RECTANGULAR END CAP	2
3	FLN-0641012230	4" LONG - 2" NPSM - 11.5 TPI MILGRADE ALUMINUM FILL NECK	1
4	FLG-050220	1/2" NPTF MILGRADE ALUMINUM FLANGE	1
5	ADP-732230	MILGRADE ALUMINUM GMC DOME RISER PLATE (OLD)	1
6	STB-482250	3/8-16 MILGRADE ALUMINUM FLAT STEP BUSHING	4
7	STB-482240	3/8-16 MILGRADE ALUMINUM CURVED STEP BUSHING	2
8	PKT-1	15" WIDE X 14" TALL MILGRADE ALUMINUM POCKET	1
9	SEP-1	14-3/4" WIDE X TALL MILGRADE ALUMINUM INSERT STEP	1
10	TBS-503200-0425	1/2" NPTF STRAIGHT ALUMINUM TUBE	1
11	FCP-1330 (600133)	2" NON-VENTED, NON-LOCK CAP	1
12	94135	1/2" SOCKET PIPE PLUG 3/4" TAPER NPTF ZINC	1

GMC PART NUMBER: 15997846

TITLE:

SIZE	REV	QC	INITIALS
C		PSI	
		DIMS	
		PARTS	
		TAG	
		PKG	

PROPRIETARY AND CONFIDENTIAL
THE INFORMATION CONTAINED IN THIS DRAWING IS THE SOLE PROPERTY OF ALUMITANK. ANY REPRODUCTION IN PART OR AS A WHOLE WITHOUT THE WRITTEN PERMISSION OF ALUMITANK IS PROHIBITED.

UNLESS OTHERWISE SPECIFIED:
DIMENSIONS ARE IN INCHES
TOLERANCES:
FRACTIONAL ±
ANGULAR: MACH ± BEND ±
TWO PLACE DECIMAL ±
THREE PLACE DECIMAL ±
INTERPRET GEOMETRIC TOLERANCING PER:
MATERIAL 5052 H32 ALUMINUM
FINISH SEE BOM
DO NOT SCALE DRAWING

	NAME	DATE
DRAWN		
CHECKED		
ENG APPR.		
MFG APPR.		
Q.A.		

COMMENTS:

AlumiTank®
THE FUEL TANK SPECIALISTS
11317 N. US HWY 14
HARVARD, IL 60033
815-943-6649
800-652-6630
FAX 855-774-6918
WWW.ALUMITANK.COM
INFO@ALUMITANK.COM

DWG. NO. AT-GM-2002-GAL REV. A
SCALE: 1:8 | WEIGHT: 49.00 | SHEET 1 OF 1